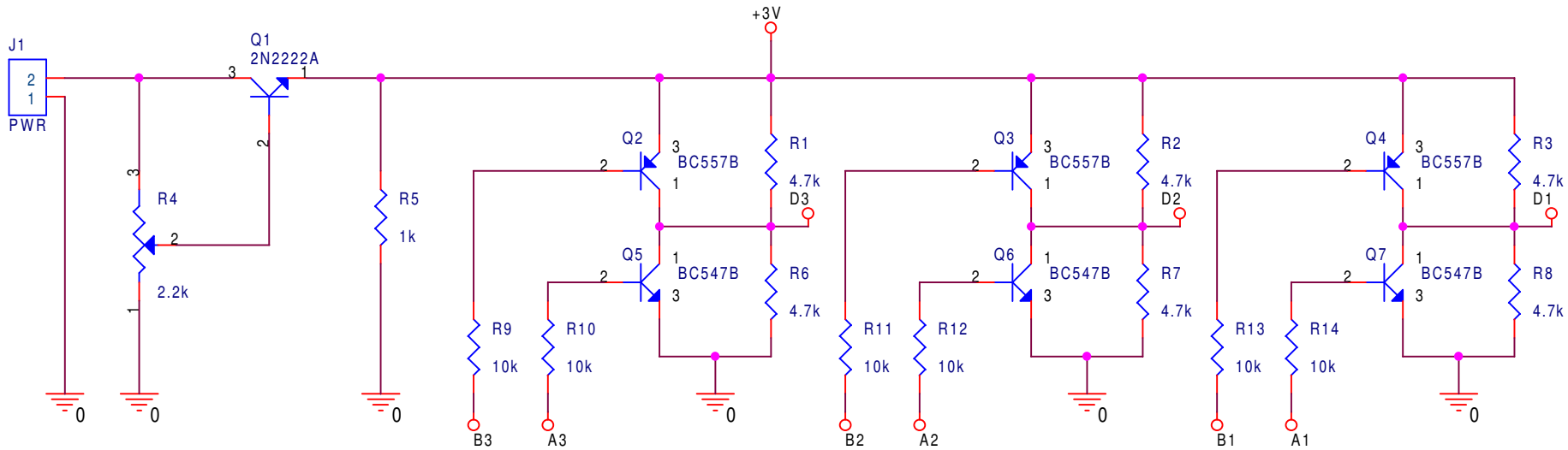

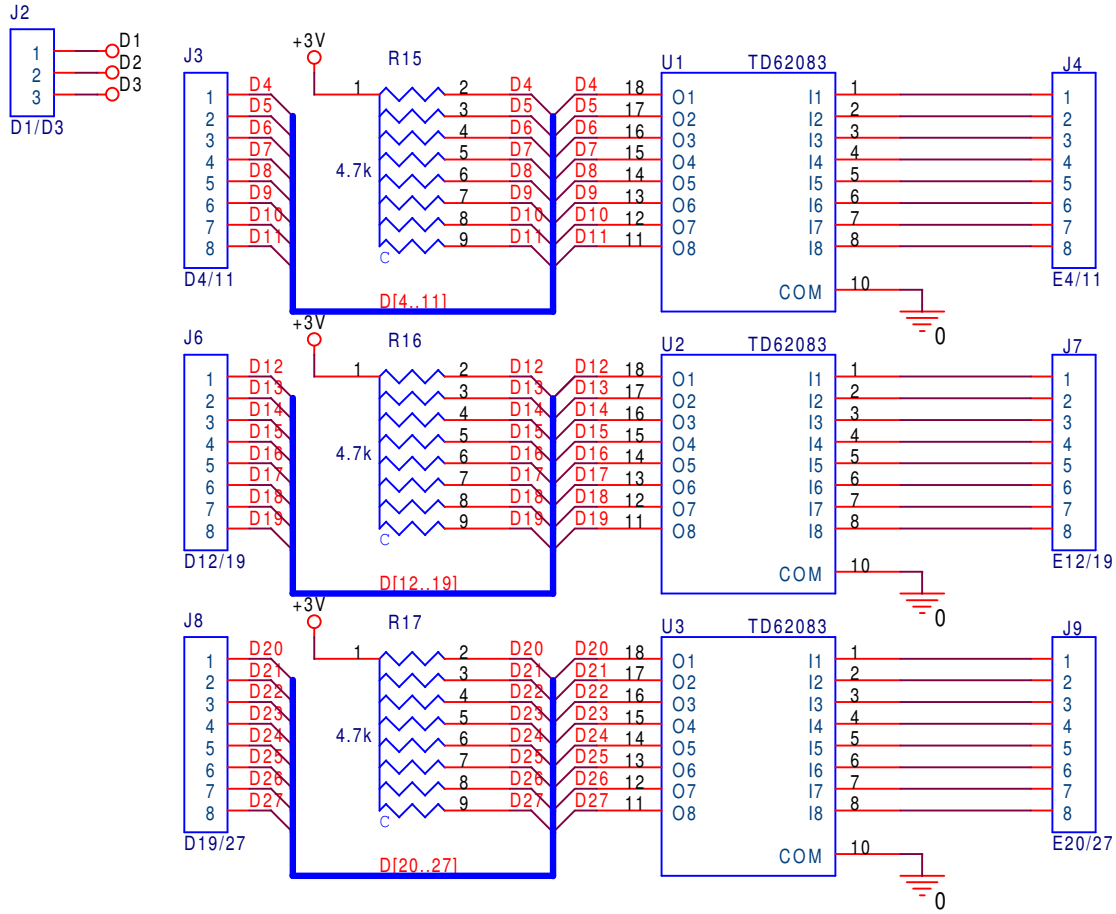

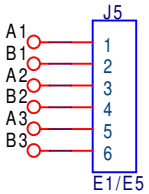

D1/D27 Salidas para el display LCD

Title <Title>		
Size A	Document Number <Doc>	Rev <RevCode>
Date: Wednesday, June 09, 2004	Sheet 1 of 1	